Fulcrum AT/12G 3G/HD NLE video production

In recording for NLE mode: 8 recording channels 3G.

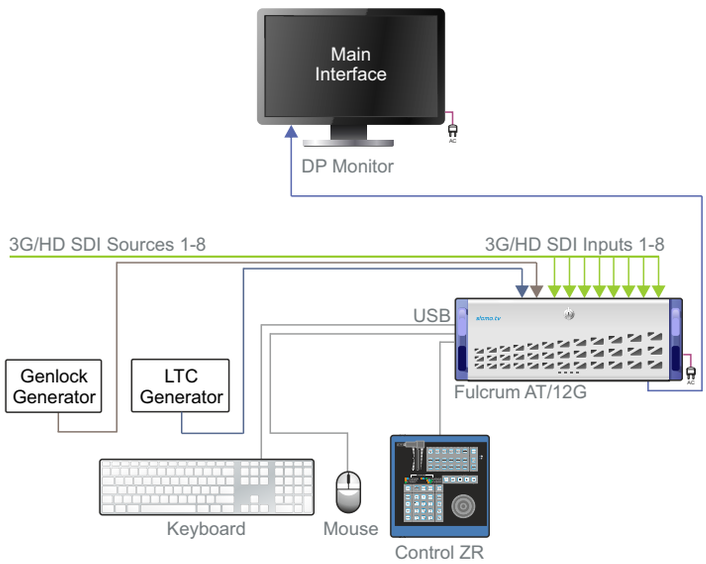

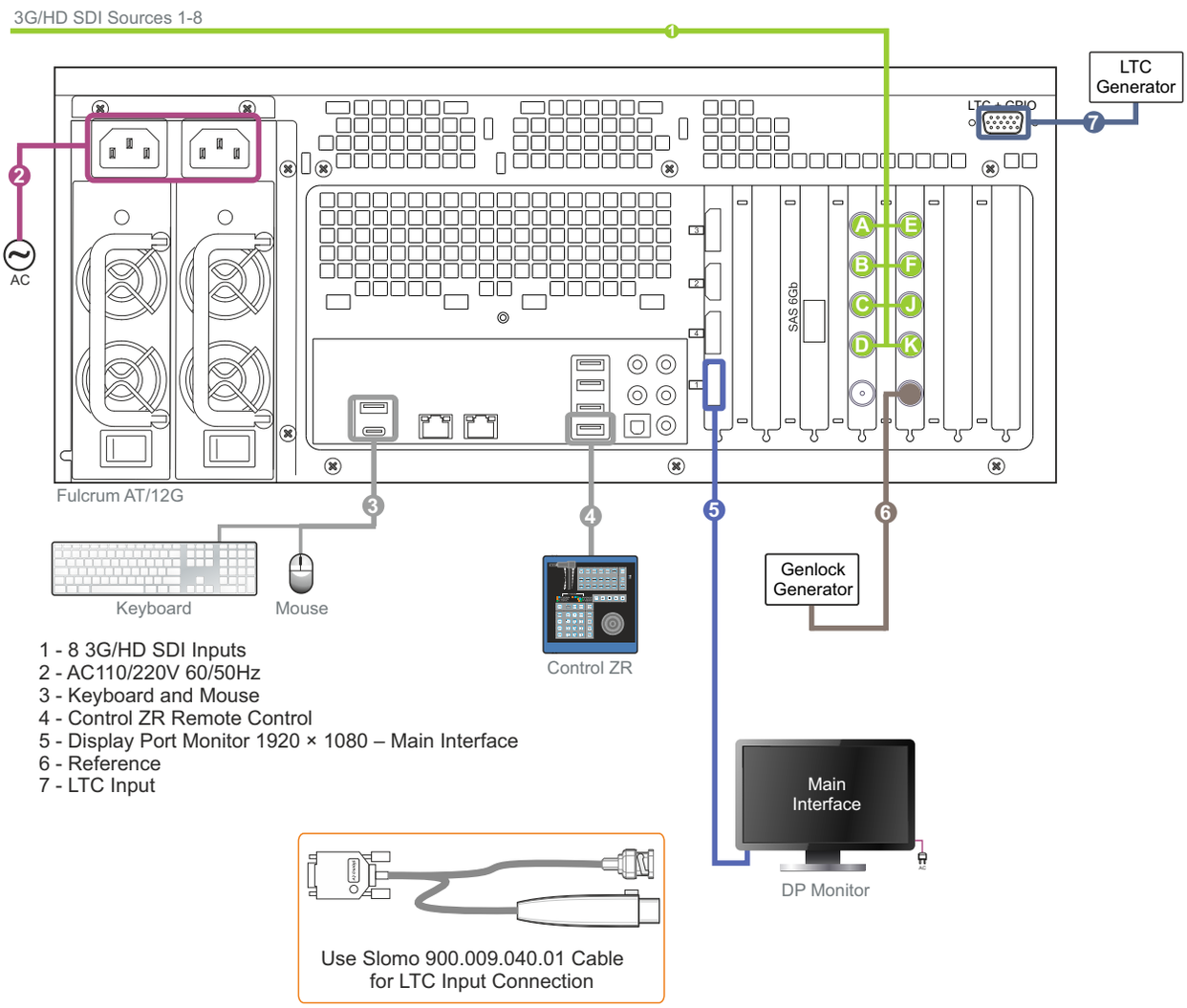

1 - 8 3G/HD SDI Inputs
2 - AC110/220V 60/50Hz
3 - Keyboard and Mouse
4 - Control ZR Remote Control
5 - Display Port Monitor 1920 × 1080 – Main Interface
6 - Reference
7 - LTC Input